TROUBLESHOOTING

Symptom	Possible Causes	Corrective Action
Hydraulic unit will not lift load	• Release valve not tightly closed • Overload condition	• Contact Pro-Lift Customer Support • Remedy overload condition
Hydraulic unit bleeds off after lift	• Overload condition • Hydraulic unit malfunction	• Remedy overload condition • Contact Pro-Lift Customer Support
Lift will not lower after unloading	• Reservoir overfilled • Linkages binding	• Drain fluid to proper level • Clean and lubricate moving parts
Poor lift performance	• Fluid level low • Air trapped in system	• Ensure proper fluid level • With ram fully retracted, remove oil filler plug to let pressurized air escape, then reinstall oil filler plug
Will not lift to full extension	• Fluid level low	• Ensure proper fluid level

90 DAYS LIMITED WARRANTY

For a period of ninety (90) days from date of purchase, **SFA Companies, Inc.** will repair or replace, at its option, without charge, any of its products which fails due to a defect in material or workmanship, or which fails to conform to any implied warranty not excluded hereby.

Performance of any obligation under this warranty may be obtained by returning the warranted product, freight prepaid, to **SFA Companies, Inc.** Warranty Service Department, 10939 N. Pomona Ave., Kansas City, MO 64153.

Except where such limitations and exclusions are specifically prohibited by applicable law, (1) the CONSUMER'S SOLE AND EXCLUSIVE REMEDY SHALL BE THE REPAIR OR REPLACEMENT OF DEFECTIVE PRODUCTS AS DESCRIBED ABOVE, and (2) **SFA Companies, Inc.** SHALL NOT BE LIABLE FOR ANY CONSEQUENTIAL OR INCIDENTAL DAMAGE OR LOSS WHATSOEVER, and (3) THE DURATION OF ANY AND ALL EXPRESSED AND IMPLIED WARRANTIES, INCLUDING WITHOUT LIMITATION, ANY WARRANTIES OF MERCHANTABILITY AND FITNESS FOR A PARTICULAR PURPOSE, IS LIMITED TO A PERIOD OF NINETY (90) DAYS FROM DATE OF PURCHASE.

Some states do not allow limitations on how long an implied warranty lasts, so the above limitation may not apply to you. Some states do not allow the exclusion or limitation of incidental or consequential damages, so the above limitation or exclusion may not apply to you. This warranty gives you specific legal rights, and you may also have other rights which vary from state to state.

Pro-Lift® Motorcycle/ATV Lift

Operating Instructions & Parts Manual

Model Number
T-2152

Capacity
1,500 lbs

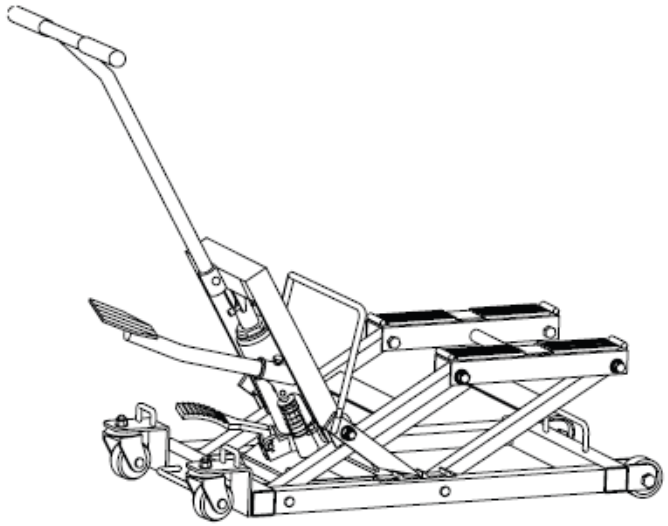

⚠ ATENCIÓN

- Leer, comprender, y seguir las instruciónes antes de utilizar el aparato.
- El manual de instrucciónes y la información de seguridad deben estar comunicado en lengua del operador antes del uso.
- No seguir estas indicaciónes puede causar daños personales o materiales.

⚠ WARNING

To avoid crushing and related injuries, NEVER work on, under or around a load supported only by a jack. Ensure locking devices are fully engaged.

SFA Companies, Inc.
10939 N. Pomona Ave.
Kansas City, MO 64153
Phone 816-891-6390

Printed in China
T-2152 M0_012012

GENERAL INFORMATION

Save these instructions. For your safety, read, understand, and follow the information provided with and on this lift. The owner and operator of this equipment shall have an understanding of this lift and safe operating procedures before attempting to use. The owner and operator shall be aware that use and repair of this product may require special skills and knowledge. Instructions and safety information shall be conveyed in the operator's native language before use of this lift is authorized. If any doubt exists as to the safe and proper use of this jack, remove from service immediately.

Inspect before each use. Do not use if broken, bent, cracked, or damaged parts (including labels) are noted. Any lift that appears damaged in any way, operates abnormally or is missing parts, shall be removed from service immediately. If the lift has been or suspected to have been subjected to a shock load (a load dropped suddenly, unexpectedly upon it), immediately discontinue use until lift has been checked by a factory authorized service center. It is recommended that an annual inspection be done by qualified personnel. Labels and Owner's Manuals are available from manufacturer (see Replacement Parts, page 5).

PRODUCT DESCRIPTION

The Pro-Lift Motorcycle/ATV Lift is specifically designed to lift and support up to rated capacity loads consisting of a single Motorcycle, ATV, Snowmobile, Water Craft or Riding Lawn Mower whose frames are compatible with the lifting members of the lift. This lift is NOT suitable for lifting, leveling and/or positioning cars, trucks, SUV's or conveyances other than those specifically listed and approved above. This lift is NOT suitable for lifting, leveling and/or positioning houses, construction trailers and dwellings in general. This product does not contain independent lifting devices, but is designed to be permanently assembled. Hydraulic unit is not to be used independently of the lift.

⚠ WARNING

- *Study, understand and follow all instructions before operating this device.*
- *Do not exceed rated capacity.*
- *Use only on hard, level surfaces.*
- *Center load on lift pads.*
- *Lift only on areas of the vehicle specified by it's manufacturer.*
- *Immediately after lifting load, ensure lift mechanical load holding means is engaged.*
- *Before moving, lower the load to lowest possible point.*
- *Secure load with appropriate restraint device.*
- *Use of this product is limited to lifting, lowering, transporting and storing in the lowered position, loads consisting of a single vehicle whose lift points are compatible with the lift platform. Incompatiblity is evident when the loaded motorcycle/ATV wobbles, appears unstable, and/or does not securely engage the lift platform.*
- *Restriaining an incompatible load will not make the load secure and may cause unexpected loss of load.*
- *Never work on, around or under a load that is not secured and stable.*
- *Keep operator's and bystander's head, hands and feet away from lift arms when raising and lowering.*
- *No alterations shall be made to this product.*
- *Only attachments and adapters supplied by the manufacturer shall be used.*
- *Failure to heed these markings may result in personal injury and/or property damage.*

REPLACEMENT PARTS

Not all components of the lift are replacement items, but are illustrated as a convenient reference of location and position in the assembly sequence. When ordering parts, give model number, part number and description below. Call or write for current pricing: phone (816) 891-6390, fax (816) 891-6599 or contact Pro-Lift Customer Support. 10939 N. Pomona Ave., Kansas City, MO 64153.

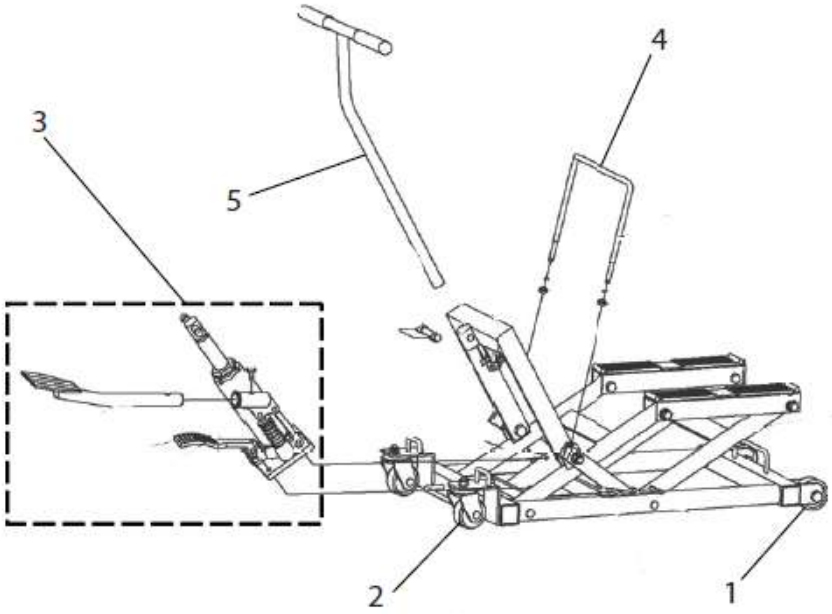

Item	Part No.	Description	Qty
1	T-2152-1	Front Wheel Assy	2
2	T-2152-2	Rear Caster Assy	2
3	T-2152-3	Hydraulic Unit Assy	1
4	T-2152-4	Height Lock Release	1
5	T-2152-5	T-handle	1
6	T-2152-6	Hardware Kit (Not Shown)	1

(Hydraulic Unit Assembly does not include mounting hardware)

BEFORE USE

Inspect lift before each use:

1. Before using this product, read the owner's manual completely and familiarize yourself thoroughly with the product and the hazards associated with its improper use.
2. Ensure that casters/wheels and lift arms move freely. Check for and tighten any loose assemblies. Do not use if cracked, broken, bent or otherwise damaged parts are noted or if the lift is suspected to have been subjected to a shock load. A shock load is caused by rapidly opening and closing the release valve while the lift is loaded. Such operation may result in a hydraulic overload which may disable the hydraulic unit.
3. Verify that the product and the application are compatible.

WARNING: *Do not use for any purpose other than that for which this device is intended.*

4. Owner and operators of this device shall be aware that no serviceable or replaceable parts are available for this device other than those parts listed on page 4. Any lift that appears to be damaged in any way, is worn or operated abnormally shall be removed from service immediately until such time as repairs can be made. Do not attempt to weld, rivet or otherwise repair this device.
5. DO NOT modify or alter this device. It is recommended that an annual inspection be done to this device by qualified persons and that missing or damaged labels, warning/safety decals be replaced with factory authorized labeling.

ASSEMBLY

1. Install hydraulic unit on receiver and secure with provided M8 x 25 bolts (2).
2. Insert pin connecting hydraulic ram to lifting frame and secure with cotter pin.
3. Install return spring by slipping one spring loop into slot on pin with the other spring loop onto bolt stub at base on hydraulic unit.

CAUTION: *Beware of tension force of return spring*

4. Install lift foot pedal into sleeve and secure with provided hex head bolt.
5. Install handle into frame and secure using the provided pin.
6. Ensure assembly rolls freely, lifts, locks, and lowers easily. Get to know how the release pedal, lift pedal, and the height locking and unlocking mechanism work prior to loading the lift.

OPERATION

1. Position lift under appropriate lift point centering load on lift saddle.
2. Locate and pump the lift foot pedal until the lift saddle comes into contact with an appropriate lift point.
3. Only after centering the load, slowly and carefully raise the lift arm by pumping the lift foot pedal.
4. Continue pumping until the load has reached desired height. Set height locking lever forward, then press release pedal to fully engage adjustment stops. Secure the load using appropriate tie down means. Four tie down loops have been provided on the frame of the lift, 2 fore and 2 aft. Make sure that the height locking mechanism is fully engaged before working on or around the loaded lift.

WARNING: *Safety tie-downs, sold separately, are required for safe operation of this device. Purchase and use tie-downs with sufficient capacity to hold motorcycles placed on this jack.*

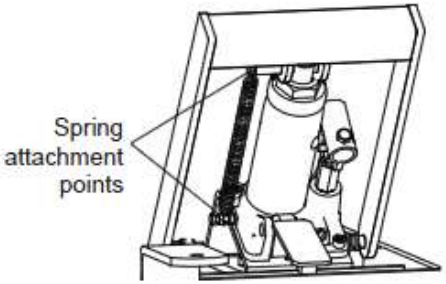

WARNING: *Be sure all tools and personnel are clear before lowering load.*

6. To lower lift, pump lift foot pedal until height locking lever disengages, stow height locking lever then depress release pedal.

MAINTENANCE

When not in use, lifting platform should be stored in the fully retracted position. Keep lift clean and well lubricated. Apply a couple of drops of light machine to all pivoting joints as needed. Thoroughly wipe up excess oil to help prevent slipping and falling.

Adding oil

1. To check hydraulic oil level, remove unit from lift and place upright on a stable, level surface. Remove oil filler plug. Oil should be level to oil filler plug hole.
2. If low, add high quality hydraulic jack oil ONLY. Never use ANY other fluid. Use of other fluid may result in hydraulic system failure, causing sudden and unexpected loss of load height.
3. Install oil filler plug, install hydraulic unit into receiver of lift. Secure with provided bolt.

Changing oil

For longest service life, change hydraulic oil after 7 years of use, sooner if used in dust and grit filled environment. Do not expose to moisture. Dry lift completely if it becomes wet. Check pump piston and ram of hydraulic unit periodically for signs of rust and corrosion. Clean mildly affected areas with a clean oily cloth. Never use abrasives on the pump piston or ram surfaces.

1. Remove hydraulic unit from lift and place upright on a stable, level surface. Remove oil filler plug and drain old oil into a suitable container.

Notice: *Dispose of used hydraulic fluid in accordance with local environmental regulations.*

2. Fill with high quality hydraulic jack oil.

Push Height Locking Lever forward to engage locking mechanism. Pull lever back to disengage Height Locking Lever.

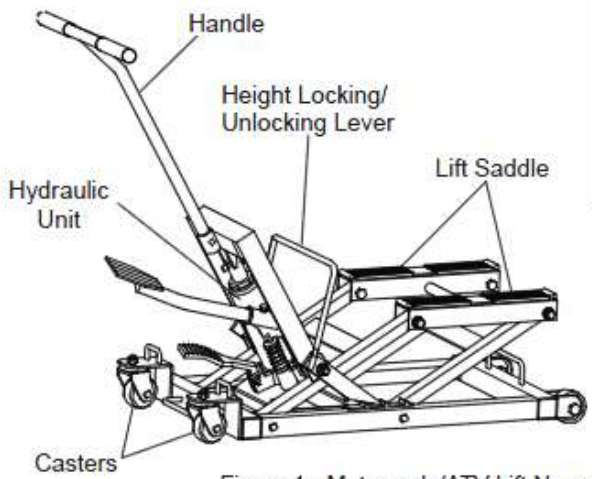

Figure 1 - Motorcycle/ATV Lift Nomenclature

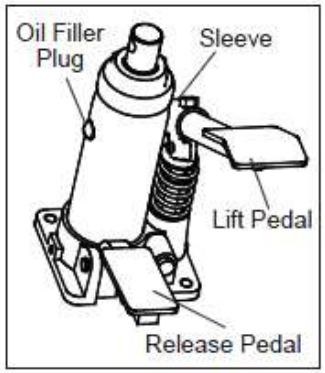

Hydraulic Unit