Gas Engine Pump

- Gas pump will provide 10,000 psi hydraulic force at remote locations
- Industrial grade 6.5 hp Briggs & Stratton Intek series gas engine
- Manual control valve for use with single or double acting cylinders or tools
- Two speed pump designed for rapid cylinder advance
- Gas pump features a sturdy protective roll cage for use in the toughest environments

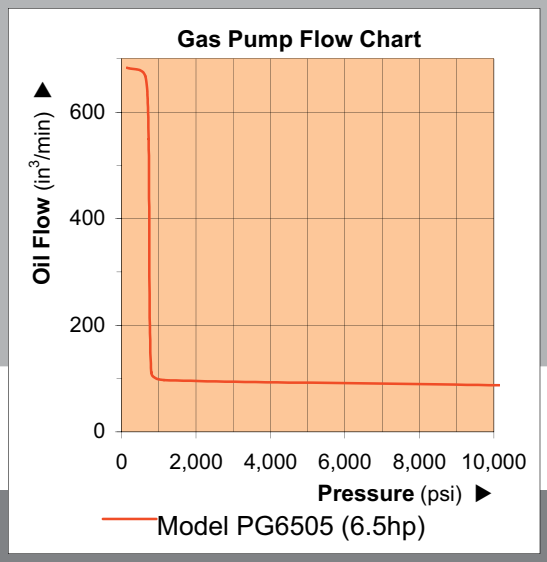

PG6505

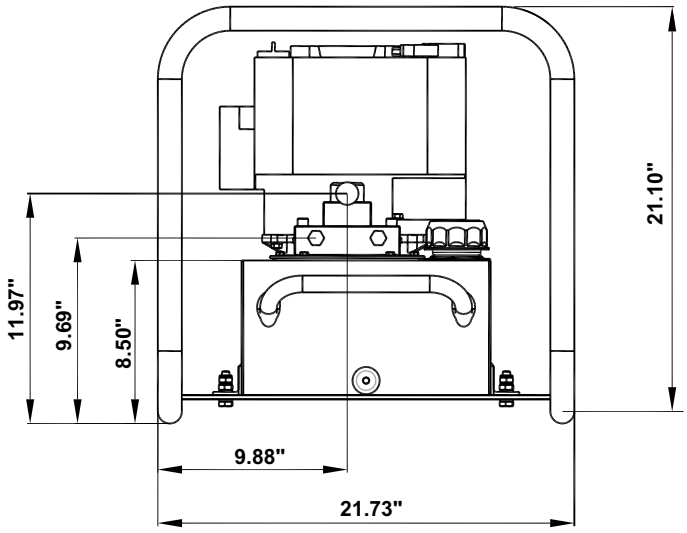

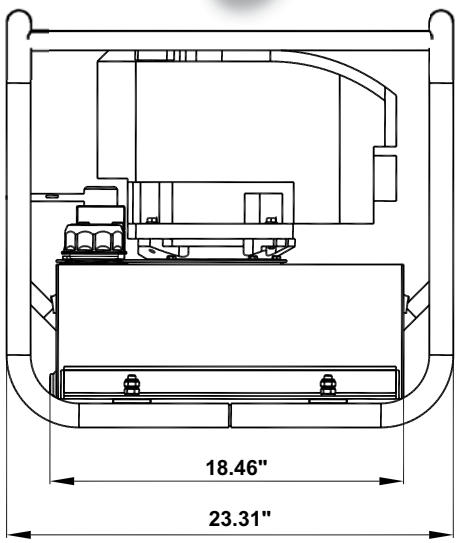

Motor Size	Usable Oil Capacity	Model Number	Pressure Rating		Oil Output Flow Rate		Valve Type	Valve Function	Rotation Speed	Sound Level	Weight
			(psi)		(in³)						
(hp)	(gal)		1st Stage	2nd Stage	1st Stage	2nd Stage			(rpm)	(dBA)	(lbs)
6.50	5.00	PG6505	580	10,000	610	67	Manual	4-way, 3-position	3600	95	84.0